SSPS-TND20

Piezoresistive sensor absolute pressure

PRODUCTS FEATURES

- Measuring range 0kPa~100kPa…700kPa
- MEMS technology
- Absolute form
- SOP package form, filled with glue
- Suitable for non-corrosive, non-conductive gas or liquid
- Working temperature range: -30°C~+100°C
- Chip back pressure cavity under pressure

SSPS-TND20

Piezoresistive sensor absolute pressure

1. Product model code table

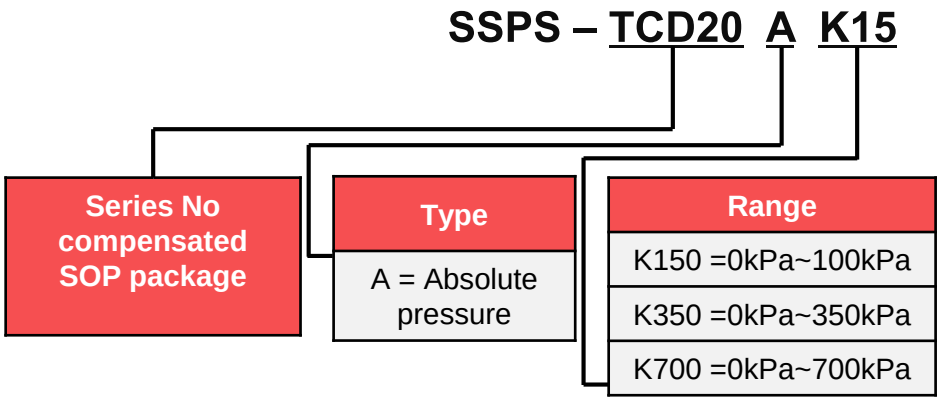

2. Technical performance

Electrical performance	
Power supply	≤ 15 V DC or ≤ 3.0 mA DC
Input impedance	4kΩ~6kΩ
Output impedance	4kΩ~6kΩ
Insulation resistance	100MΩ, 100VDC
Allowable overload	1.5 times full scale
Burst pressure	≥ 2 times full scale

Tel: 8-812-309-58-32
www.eplast1.ru
Add: 198099, Saint-Petersburg,
Kalinina street 2, b.4,lit.A.

SSPS-TND20

Piezoresistive sensor absolute pressure

Base condition	
Measuring medium	air
Medium temperature	(25±1)°C
Ambient temperature	(25±1)°C
Vibrate movement	0.1g(1m/s2) Max
Wet degree	(50%±10%) RH
Electricity source	(5±0.005) V DC

Basic parameters				
Parameter	**Min.**	**Typ.**	**Max.**	**Units**
Standard range		100, 350, 700		kPa
Constant voltage power supply		5	15	V
Constant current power supply		1	3	mA
Storage temperature	-40		+150	°C
Bridge arm resistance	4	5	6	kΩ
Zero output	-30		30	mV
Full-scale output	60		120	mV
Bridge resistance temperature error	2000	2600	3200	ppm/°C
Zero temperature error	-0.08	±0.05	0.08	%FS/°C
Full-scale temperature error	-0.21	-0.18	-0.15	%FS/°C constant voltage power supply
Non-linear	-0.3	±0.15	0.3	%FS
Hysteresis	-0.3	±0.15	0.3	%FS

Tel: 8-812-309-58-32
www.eplast1.ru
Add: 198099, Saint-Petersburg,
Kalinina street 2, b.4,lit.A.

SSPS-TND20

Piezoresistive sensor absolute pressure

3. Pin definition

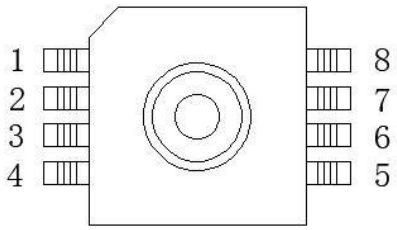

Pin number	Lead definition	Definition
2	Vo+	Output positive
4	GND	Power negative
6	Vo-	Output negative
8	Vs+	Power positive
1, 3, 5, 7	NC	-

4. Mechanical dimension

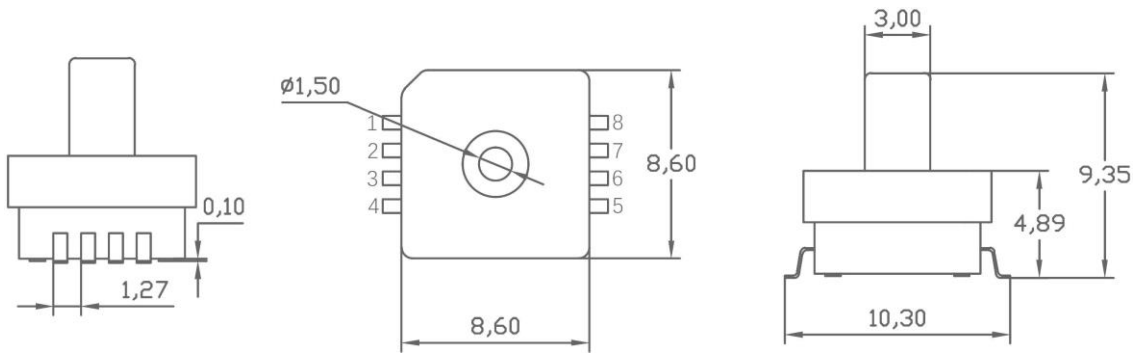

*All dimensions in mm

Tel: 8-812-309-58-32
www.eplast1.ru
Add: 198099, Saint-Petersburg,
Kalinina street 2, b.4,lit.A.

SSPS-TND20

Piezoresistive sensor absolute pressure

5. Example of amplifying circuit

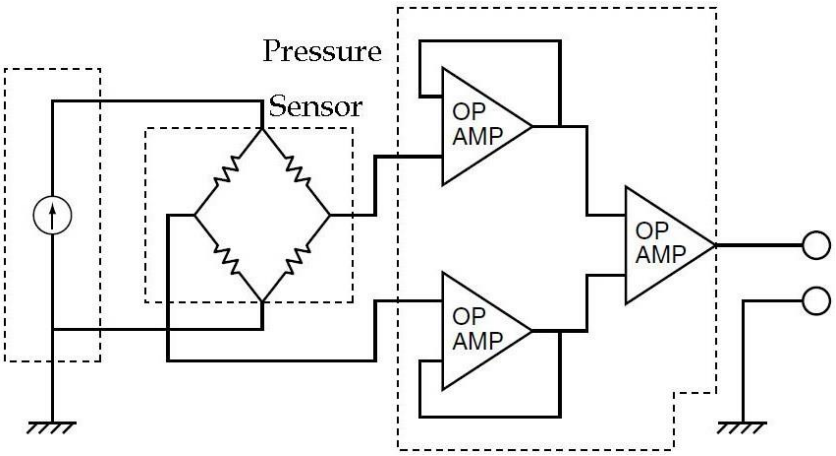

The pressure sensor is driven by constant current for voltage conversion, after that, zoom in and use as needed.

The circuit above on the right is a general-purpose circuit.

6. Precautions for use

1. Welding

Since this product has a small structure with a small heat capacity, please minimize the influence of external heat. Otherwise it may be caused by thermal deformation Causes damage and changes in characteristics. Please use non-corrosive rosin type flux. In addition, since the product is exposed to the outside, please be careful not to allow the flux to penetrate the inside.

1) Hand welding

Please use a soldering iron with a head temperature of 260 to 300 ℃ (30 W) to perform the work within 5 seconds.

In the case of soldering with a load applied to the terminals, please be careful because the output may change.

Please fully clean the soldering iron tip.

Tel: 8-812-309-58-32
www.eplast1.ru
Add: 198099, Saint-Petersburg,
Kalinina street 2, b.4,lit.A.

SSPS-TND20

Piezoresistive sensor absolute pressure

2) DIP welding (DIP terminal type)

Perform operations within 5 seconds in a DIP solder bath at a temperature of 260 ℃ or less.

When mounting on a substrate with a small heat capacity, since thermal deformation may occur, please avoid DIP soldering.

3) Correction of welding part

Please complete the correction at one time.

When making corrections to lap welding, please use an electric soldering iron with a smooth head shape, and do not apply additional flux.

Regarding the temperature of the tip of the soldering iron, please use a soldering iron that is below the temperature stated in the specification.

4) Excessive force applied to the terminal will cause deformation and damage the solderability, so please avoid dropping the product or performing cumbersome use.

5) The warpage of the printed board relative to the entire sensor should be kept below 0.05mm, please manage this.

6) After installing the sensor, when cutting and bending the substrate, please be careful not to cause stress on the soldering part.

7) Since the terminals of the sensor are of exposed structure, touching the terminals such as metal sheets may cause output abnormalities. Please be careful not to touch it with metal pieces or hands.

8) After soldering, when applying a coating to prevent deterioration of the insulation of the substrate, please be careful not to make the sensor adhere to the surface of the sensor.

Tel: 8-812-309-58-32
www.eplast1.ru
Add: 198099, Saint-Petersburg,
Kalinina street 2, b.4,lit.A.