SENSSET
SENSOR SEQUENCE

Calibration pressure sensor

SSPS-TCC31

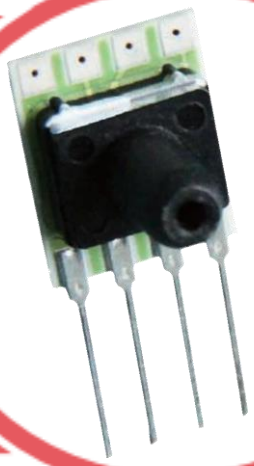

Product features

- Compact
- Has a compensated temperature range
- Low cost
- Optionally on the range
- High accuracy
- 4 in H_2O to 100 psi pressure range
- Full optional based on the requirements

SSPS-TCC31

Calibration pressure sensor

Specifications for 25˚C, 12 VDC.

Parameters	MIN.	Typ.	MAX	Units
Supply voltage	3	12	16	VDC
Pressure range	0.15		100	Psi
Offset	-1	0	1	mV
input resistance		5		kΩ
output resistance		3		kΩ
Pressure accuracy		0.25	0.5	%FS
Gage (pressure)		50		psig
compensated temperature range	0		70	˚C
Working temperature	-25		85	˚C
Store temperature	-45		125	˚C

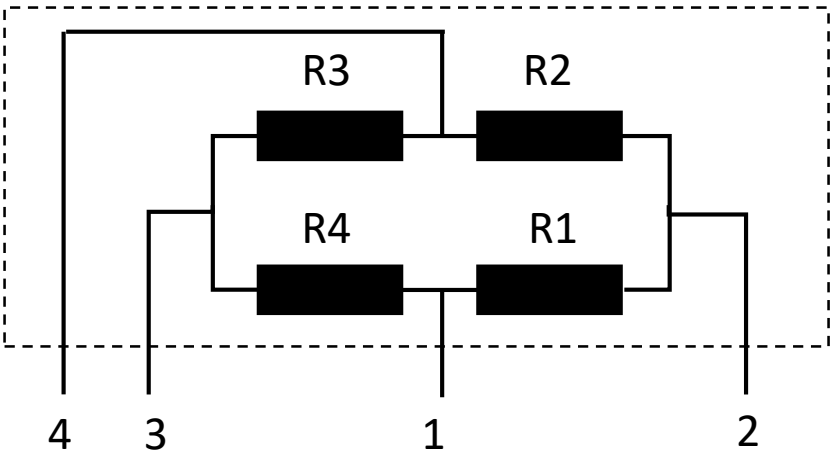

Tel: 8-812-309-58-32
www.eplast1.ru
Add: 198099, Saint-Petersburg,
Kalinina street 2, b.4,lit.A.

SSPS-TCC31

Calibration pressure sensor

PIN	Definition
1	Negative power
2	Positive power output
3	Positive power
4	Negative power output

Product model code table

SSPS – TCC31 D I04 X

Series compensated SIP package

Type
D = Differential
G = Gage

Range
I04 = 4 in H_2O
I10 = 10 in H_2O
S001 = 1 psi
S005 = 5 psi
S015 = 15 psi
S030 = 30 psi
S100 = 100 psi

Alternative options

Tel: 8-812-309-58-32
www.eplast1.ru
Add: 198099, Saint-Petersburg,
Kalinina street 2, b.4,lit.A.

SSPS-TCC31

Calibration pressure sensor

Parameters	Full scale output			Burst pressure (psi)
	MIN	Typ	MAX	
SSPS-TCC31I04..	23	25	27	3
SSPS-TCC31I10..	18	20	22	5
SSPS-TCC31S001..	16	18	20	10
SSPS-TCC31S005..	57	60	63	20
SSPS-TCC31S015..	85	90	95	60
SSPS-TCC31S030..	85	90	95	60
SSPS-TCC31S100..	95	100	105	150

Mechanical dimensions

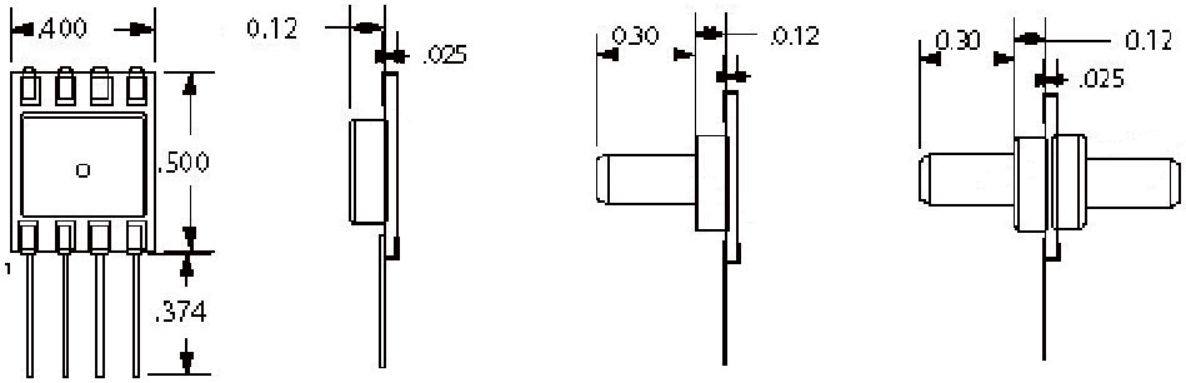

All sizes are in inches
Reflow soldering at a maximum temperature of 250, 2-4 sec
All parameters were measured at 25 and 12 VDC.
Pressure was applied to the positive port B

Tel: 8-812-309-58-32
www.eplast1.ru
Add: 198099, Saint-Petersburg,
Kalinina street 2, b.4,lit.A.